REV.	DESCRIPTION	DATE	DRAFTER	APPROVER
A1	DWG.REL	2020.05.25	DENG	JIN

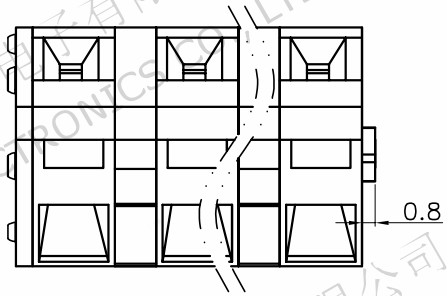

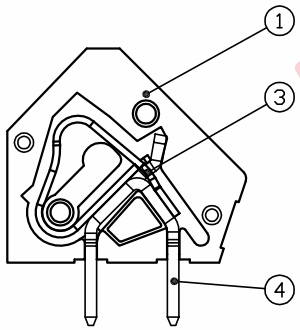

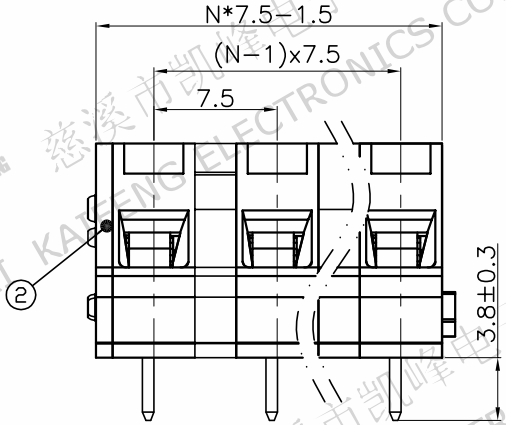

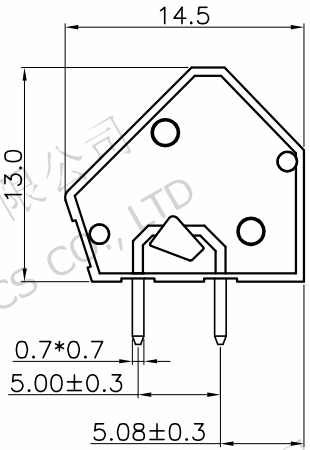

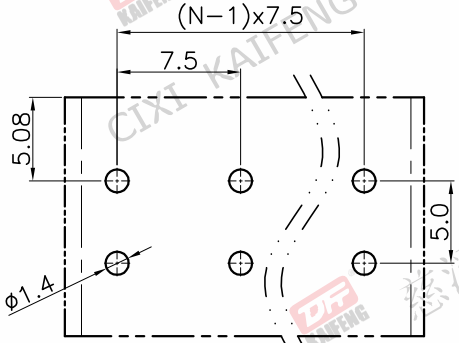

P.C.B.LAYOUT

- Material
  ①Button : PA66, UL94V−0
  ②Cover : PA66, UL94V−0
  ③Housing : PA66, UL94V−0
  ④Reed : Stainless steel
  ⑤Pin header :Copper alloy, Tin plated

- Electrical

	UL	IEC
Rated voltage :	300V	750V
Rated current :	15A	17A

  Contact resistance : 20mΩ(Max)
  Insulation resistance: 500MΩ/DC500V
  Withstanding Voltage : AC2000V/1min
  Wire range: 24−14AWG 2.5mm²

- Mechanical
  Operating temperature:−40℃∽+105℃
  Soldering temperature:250℃±5/5sec
  Strip length: 5−6mm

- RoHS compliance

HOW TO ORDER

KF188A−7.5−XXP−1 X−XXXXX

- KF188A: MODEL
- 7.5: Pitch:mm
- XXP: No.of poles: 2~24P
- 1: 1:Single Pitch, 2:Double Pitch
- X: Color: G:Green, R:Red, K:Black, W:White, O:Orange, B:Blue, GR:Gray
- XXXXX: Customer Request

Pitch range			Nominal dimension range					
>0 ~ 6	>6 ~ 10	>10 ~ 24	>0 ~ 30	>30 ~ 60	>60 ~ 100	>100 ~ 150	>150	0.1/10
±0.15	±0.20	±0.30	±0.30	±0.50	±0.70	±1.00	±1.30	±2°

PROJECTION		TITLE	KF188A−7.5−XXP−1X
UNIT	mm		
SHEET SIZE	A4	SERIES	KF188A
DRAWING TYPE	CUSTOMER DRAWING		
SCALE	1:1	SHEET	1 OF 1
DRAWING NO.	W11000412		

慈溪市凯峰电子有限公司
CIXI KAIFENG ELECTRONICS CO.,LTD