REV.	DESCRIPTION	DATE	DRAFTER	APPROVER
A1	DWG.REL	2020.05.19	DENG	JIN

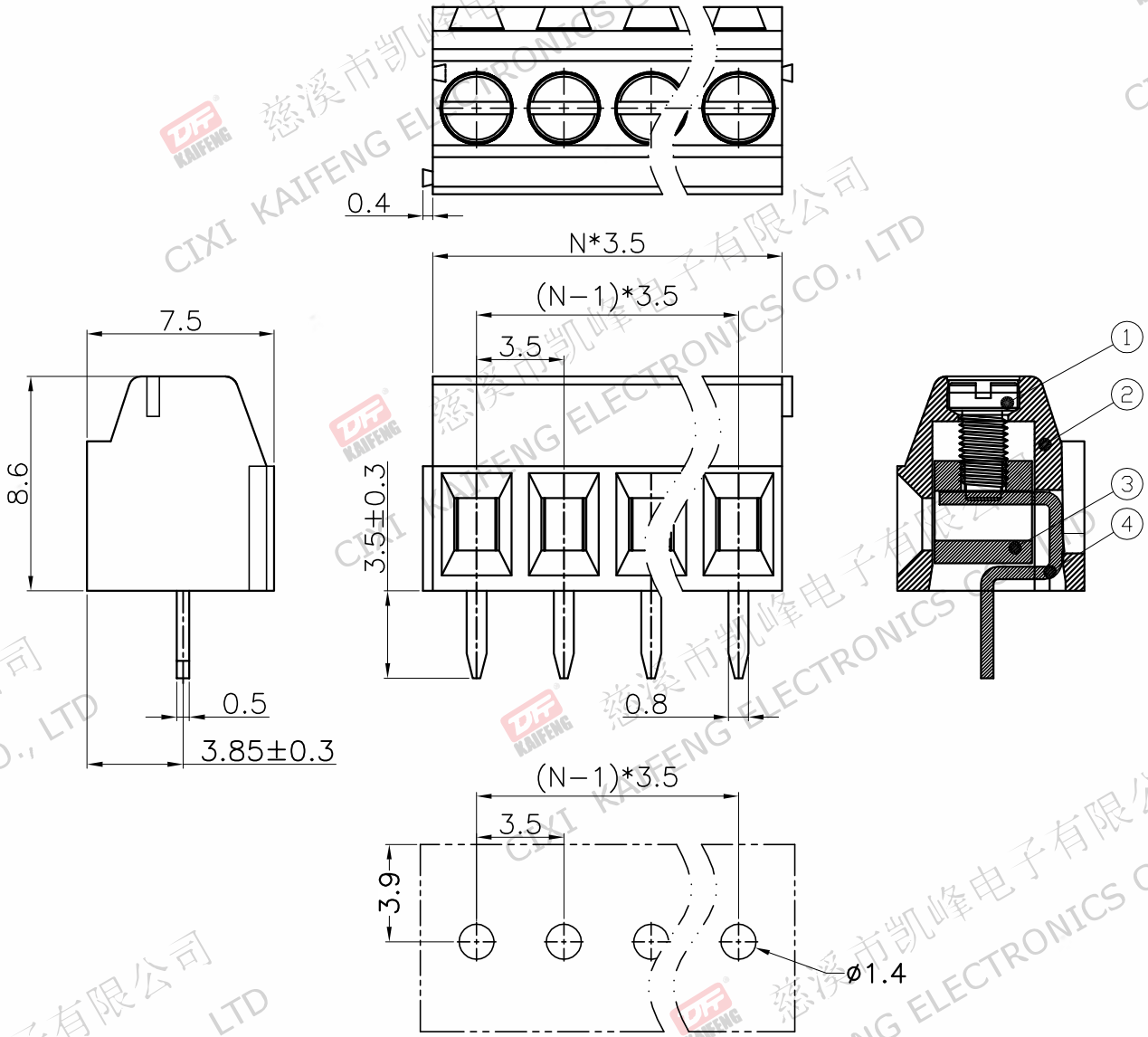

P.C.B.LAYOUT

- Material
  ①Screws : M2.0 steel, Zinc plated, "−" slot type
  ②Housing : PA66, UL94V−0
  ③Clamp : Copper alloy, Ni plated
  ④Pin header : Copper alloy, Tin plated

- Electrical

	UL	IEC
Rated voltage :	150V	130V
Rated current :	10A	10A

  Contact Resistance: 20mΩ
  Insulation resistance: 500MΩ/1000V
  Withstanding Voltage : AC1500V/1min
  Wire range: 24−16AWG 1.5mm²

- Mechanical
  Operating temperature:−40℃∽+105℃
  Soldering temperature:250℃±5/5sec
  Torque: 0.2N.m (1.77Lb.in)
  Strip length: 5−6mm

- RoHS compliance

HOW TO ORDER

KF124D−3.5−XXP−1 X−XXXXX

- KF124D: MODEL
- 3.5: Pitch:mm
- XXP: No.of poles: 2~24P
- 1: 1:Single Pitch, 2:Double Pitch
- X: Color: G:Green, K:Black, O:Orange, GR:Gray, R:Red, W:White, B:Blue
- XXXXX: Customer Request

Pitch range			Nominal dimension range						
>0 ~ 6	>6 ~ 10	>10 ~ 24	>0 ~ 30	>30 ~ 60	>60 ~ 100	>100 ~ 150	>150		0.1/10
±0.15	±0.20	±0.30	±0.30	±0.50	±0.70	±1.00	±1.30		±2°

PROJECTION		TITLE	KF124D−3.5−XXP−1X
UNIT	mm		
SHEET SIZE	A4	SERIES	KF124D
DRAWING TYPE	CUSTOMER DRAWING		
SCALE	1:1	SHEET	1 OF 1
DRAWING NO.	W15000392		

慈溪市凯峰电子有限公司
CIXI KAIFENG ELECTRONICS CO.,LTD