REV.	DESCRIPTION	DATE	DRAFTER	APPROVER
A1	DWG.REL	2020/5/18	ZHANG	JIN

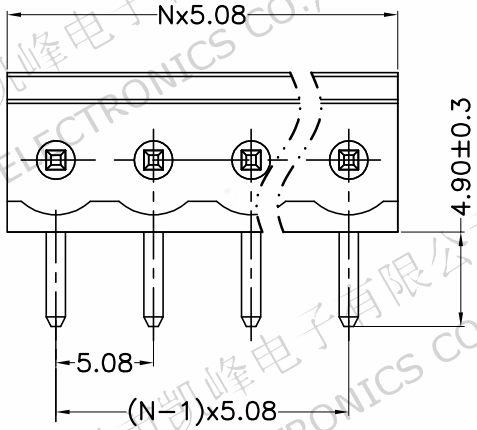

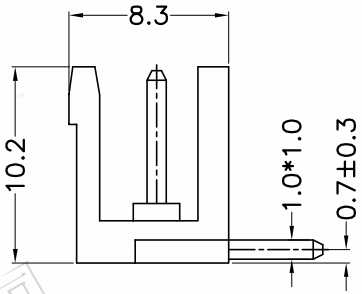

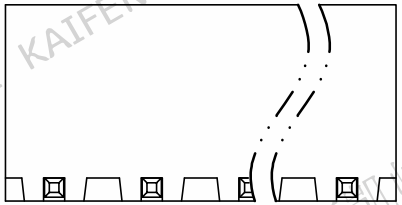

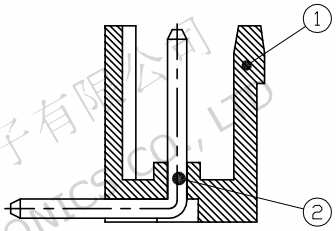

- Material
  ①Housing : PA66, UL94V−0
  ②Pin header : Copper alloy, Tin plated
- Electrical
  Rated voltage : 300V
  Rated current : 10A
  Contact resistance : 20mΩ(Max)
  Insulation resistance: 500MΩ/DC500V
  Withstanding Voltage : AC2000V/1min
- Mechanical
  Operating temperature:−40℃∽+105℃
  Soldering temperature:250℃±5/5sec
- RoHS compliance

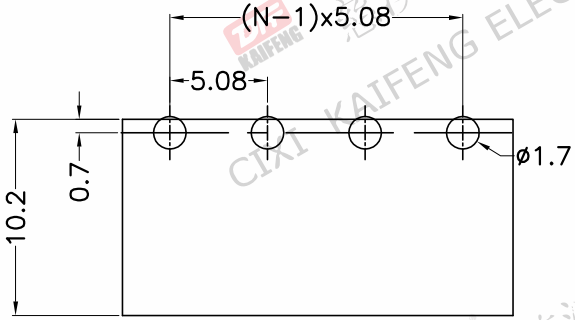

P.C.B.LAYOUT

HOW TO ORDER

HT508R−5.08−XXP−1 X−XXXXX

- HT508R: MODEL
- 5.08: Pitch:mm
- XXP: No.of poles: 2~24P
- 1: 1:Single Pitch, 2:Double Pitch
- X: Color: G:Green, R:Red, K:Black, W:White, O:Orange, B:Blue, GR:Gray
- XXXXX: Customer Request

Pitch range			Nominal dimension range						— ⌒ ⊡
>0 ~ 6	>6 ~ 10	>10 ~ 24	>0 ~ 30	>30 ~ 60	>60 ~ 100	>100 ~ 150	>150		0.1/10
									∠
±0.15	±0.20	±0.30	±0.30	±0.50	±0.70	±1.00	±1.30		±2°

DRAWING TYPE	CUSTOMER DRAWING		
SCALE	1:1	SHEET	1 OF 1
DRAWING NO.	W10000062		

PROJECTION		TITLE	HT508R−5.08−XXP−1X
UNIT	mm		
SHEET SIZE	A4	SERIES	HT508R

慈溪市凯峰电子有限公司
CIXI KAIFENG ELECTRONICS CO.,LTD