REV	ECN	CONTENT	CHECK	DATE
V1.0		ORIGINAL	Cain	2020.10.17
V2.0		Change appearance	Cain	2020.11.11
V3.0		New part number	Cain	2021.10.21

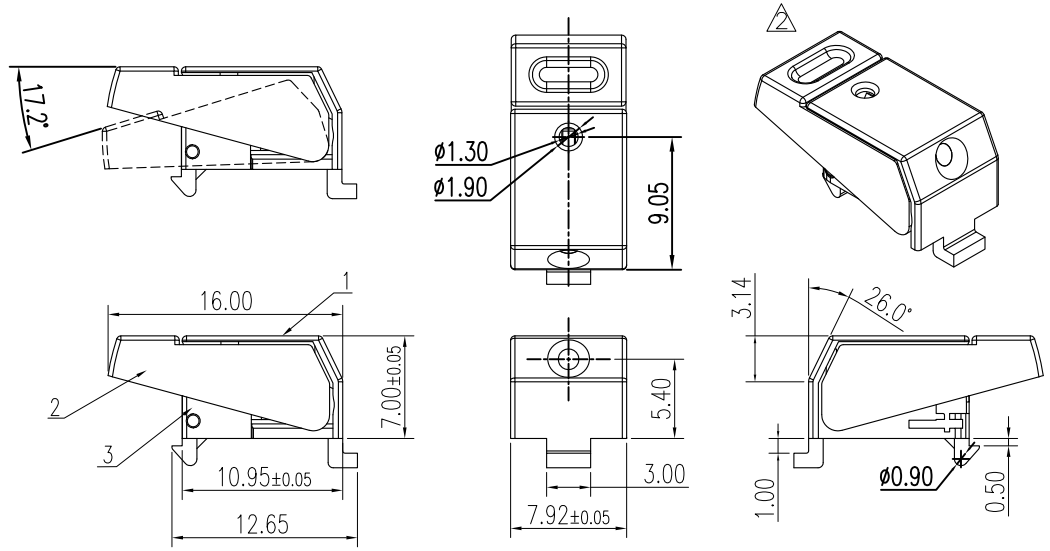

ELECTRICAL:
1.Rated voltage: 24V~36VDC,110~220VAC
2.Rated current: 5A
3.Contact resistance: 20mΩ
4.Withstanding voltage: AC1250V/1min
5.Wire range: 24(ø0.5mm)~ 18AWG(SOLID)
6.RoHS Compliance

MECHANICAL
1.Temp. range: −40℃ ~+105℃
2.Mechanical Life: 1000 cycles
3.Color : Pantone cool gray 6C
4.Texture: MT11003
5.Reflow soldering > 260°±5°

HOW TO ORDER

KF1051- X - 7.92- XX - X XX

- KF1051: Series No.
- X: Color of material: E:Gray(Pantone cool gray 6C)
- 7.92: Pitch
- XX: Version 3
- X: Color of priting: E:Gray(Pantone cool gray 1C)
- XX: Serial No.
  - 00:No words
  - 01:Y1
  - 02:G
  - 03:R
  - 04:W1
  - 05:C
  - 06:*OB

3

DFT PN	UNBT PN
KF1051-E-7.92-01-E00	120-03671
KF1051-E-7.92-01-E01	120-03672
KF1051-E-7.92-01-E02	120-03673
KF1051-E-7.92-01-E03	120-03674
KF1051-E-7.92-01-E04	120-03675
KF1051-E-7.92-01-E05	120-03676
KF1051-E-7.92-01-E06	120-03677

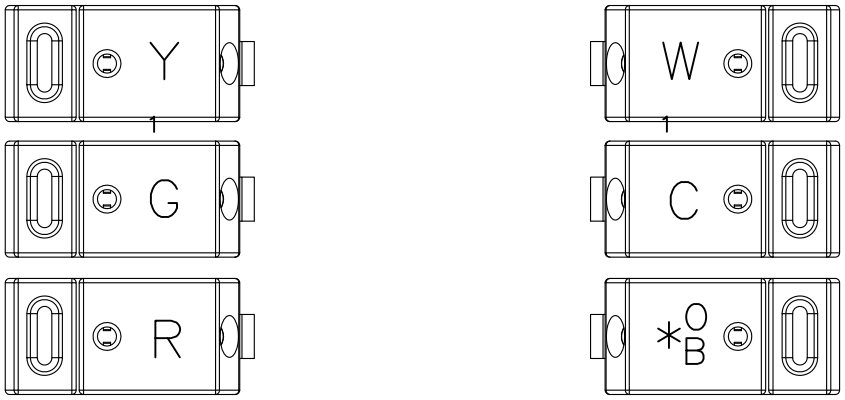

Item	Name of part	Material	No.	Note
4	Spring	Stainless steel	1	Au Plated
3	Housing3	UL94-V0	1	Gray
2	Housing2	UL94-V0	1	Gray
1	Housing1	UL94-V0	1	Gray

General tolerance in mm						radii and chamfers			shorter angle side			⌯	— //		
over 0.5 to 3	over 3 to 6	over 6 to 30	over 30 to 120	over 120 to 400	over 400 to 1000	over 0.5 to 3	over 3 to 6	over 6	up to 10	over 10 to 50	over 50 to 120	all	over 0 to 100	over 100 to 150	over 150
±0.15	±0.2	±0.25	±0.3	±0.5	±0.8	±0.2	±0.5	±1.0	±1°	±30′	±20′	0.5	0.2	0.3	0.5

APP.		DATE		NAME	KF1051-7.92-XX-XXXX		
CHK.		DATE					
DWG.		DATE		DWGNO.	XXXXXXXX		
UNITS	MM	SCALE	1:1	SHEET	1/1	PROJECTION-METHOD	

慈溪市凯峰电子有限公司
CIXI KAIFENG ELECTRONICS CO.,LTD